BTE-3 / BTE-3A

BATTERYLESS TELEPHONE

Batteryless telephone in water protected cabinet, with 12 position line selector switch, LED indication for incoming calls and hand generator. In addition there is siren and rotary light device on top of the cabinet. Typically this station is mounted in machine rooms, or outdoor on deck where extra protection of the equipment is necessary.
On special order we can deliver same for 24 line selection (BTE-324)

FEATURES

- Self powered, generated by built in hand generator
- Up to 30 min conversation on one charge
- Common communication line
- Wall mount
- Telephone made of grey fireproof ABS with printed front
- Built in relay contact (pot. free) for an external signal device
- Terminals for optional headset for hands-free operation
- Amplified unit (BTE-3A Optional)
- Up to 12 lines (Optional 24 lines)
- Available in bigger cabinet for stowing the headset for hands-free operation (Optional)

SPECIFICATIONS	
Material of cabinet	GW PLAST 120℃ grey RAL7035
Operating temp.	-20℃ to +55℃
Relative humidity	Up to 95% non condensing
Acustic alarm	104 dBA at 1 m
Luminous alarm	21 W 90 cycles / min
Alarms supply	24 V DC / 25 W
Conversation time	Approx. 25 min
IP raiting	IP-66
Dimensions (HxWxD)	600 x 380 x 160 mm
Weight	5 kg
Connections	No. of wires = No. of extensions + 4
Handset	Black ABS with 1,5 m spiral cord

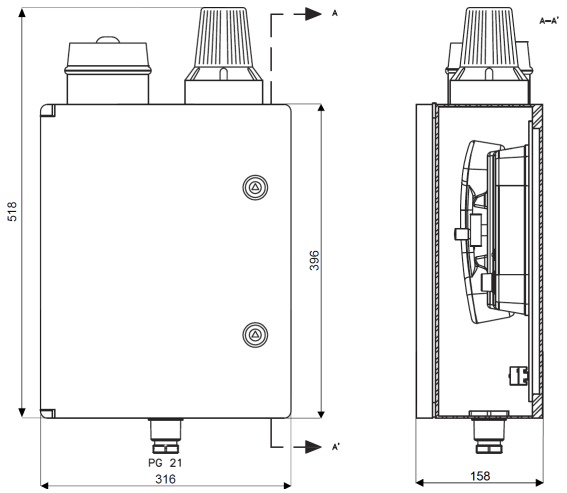

uller
International Communication

Tønsberg, NORWAY
Tel:+47 33384600
www.uller.no e-mail: uller@uller.no

DESIGN AND SPECIFICATION SUBJECT TO CHANGE WITHOUT NOTICE
DS-BTE3-ET-040711